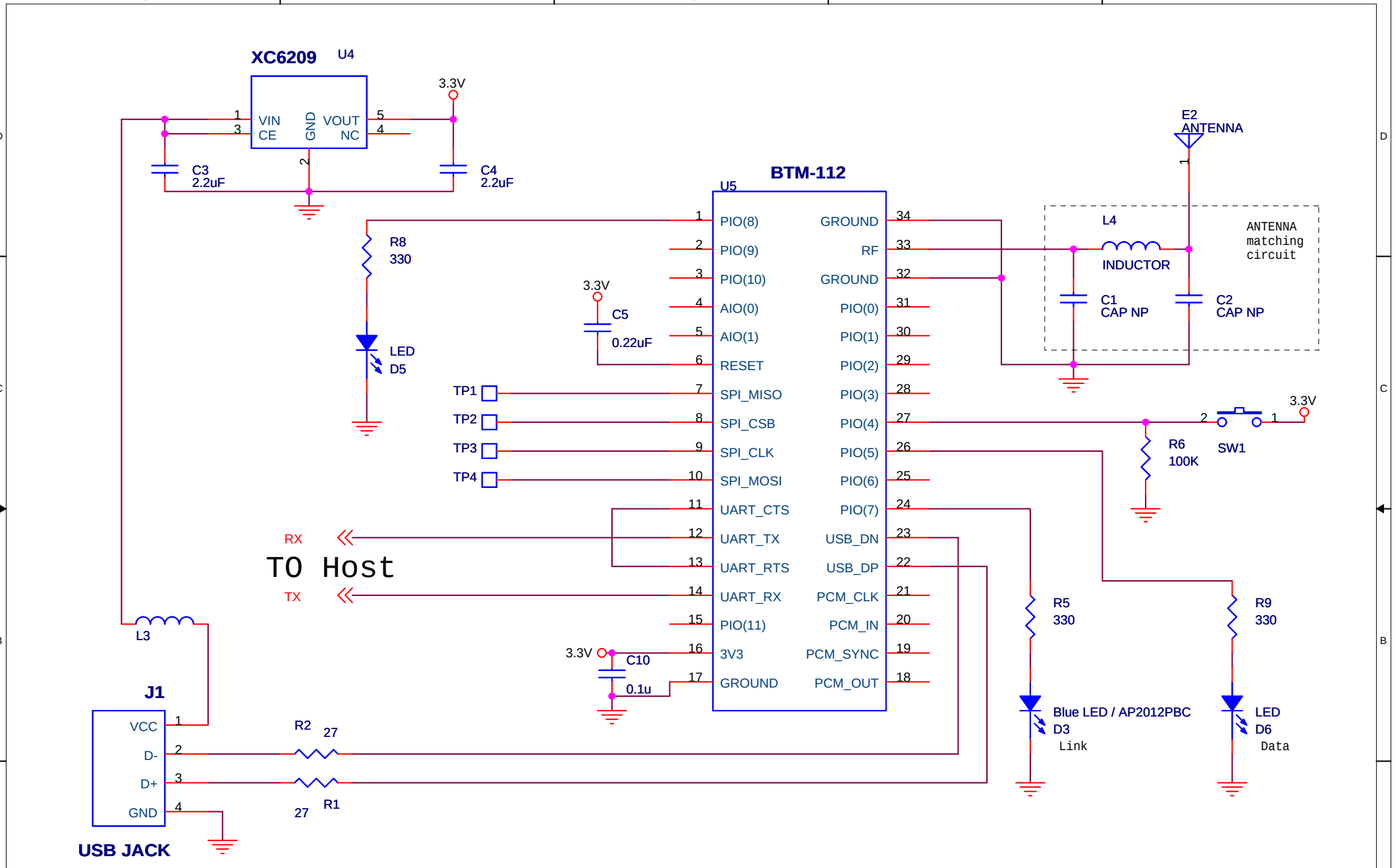

Title	SPP MODULE APPLICATION	
Size A	Document Number <Doc>	Rev X.X
Date: Friday, March 28, 2008	Sheet 1 of 1	